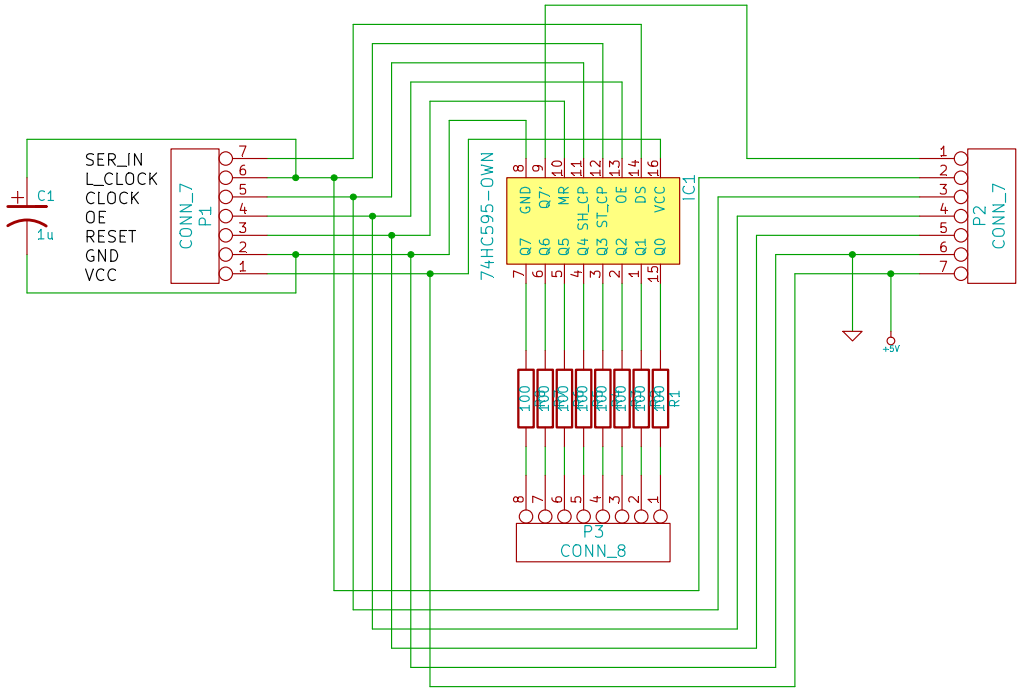

Henri Nurmi / henri.nurmi@kapsi.fi		
File: SIPO.sch		
Sheet: /		
Title: LedCube SIPO Module		
Size: A4	Date: 3 jan 2012	**Rev: 1.0**
KiCad E.D.A. eeschema (2012-01-19 BZR 3256)-stable		Id: 1/1